HEMWAY

hemway@hemway.com.cn

SHENZHEN HANMINGWEI SMART EQUIPMENT CO., LTD

Add:Building 3B, 8 Cichang Road, Henggang, Longgang District, Shenzhen

Tell:0755-8467 9158 Fax:0755-2377 3276

INSTRUCTIONS

YUNBA H99X1 SMART IRONING STEAM GENERATOR

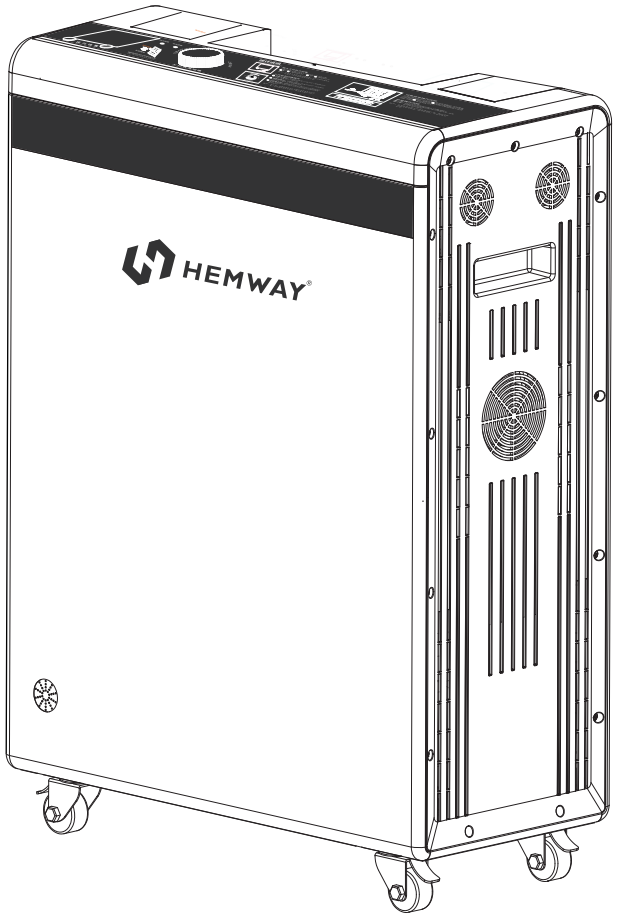

STATEMENT

SHENZHEN HEMWAY SMART DEVICE CO.,LTD
All right reserved.

Without the express written permission of SHENZHEN HEMWAY SMART DEVICE CO.,LTD, no unit or individual may act arbitrarily to reproduce, reproduce or translate partor all of the contents of this instruction shall not be used in any form or by any means (electronic, mechanical, photocopying,recording or otherwise) for the dissemination of commodities or for any commercial or profit-making purposes.

If there are any changes in the product structure and appearance, please refer to the real product.The product specifications and information mentioned in this instruction arefor reference only and are subject to change without notice.Check out our website at anytime:
http://www.hemway.com.cn

The product works under high temperature and high pressure environment. Non-professional maintenance personnel are not allowed to disassemble the product without permission. Please refer to our warranty card for warranty.

Outside the warranty period, we also provide services. If you need to replace the parts, we will charge a certain amount for the parts.

Unless otherwise agreement, this instruction is used only as a guidence and all statements, information, etc. in this book do not constitute any form of warranty.

INDEX

一、Product Introduction ·····
Product Introduction ····· 01
Technical Parameters ····· 01
Product External Structure ····· 02-04
Packing list ····· 05

二、Installation Guidance ·····
Product Installation Standards ····· 06
Equipment Installation ····· 07-10

三、Operating Guidance ····· 11

四、Maintaince ····· 12

五、Fault Analysis and Troubleshooting ····· 13-14

六、After Service ····· 15

一、PRODUCT INTRODUCTION

· Product Introduction

YUNBA H99X1 smart ironing steam generator is a garment ironing product independently developed by our company and obtained a number of national patents. The product has the functions of automatic water adding, frequency conversion heating, automatic drainage,discharging and intelligent scale removal. At the same time, it has the characteristics of adjustable pressure, intelligent dormancy and fault code reminder. The steam capacity of the product is sufficient to meet the requirements of small ironing,medium ironing , big steam ironing and other industries .

This product is suitable for all kinds of clothing factories, clothing finishing centers,home textile stores, curtain stores, laundry rooms, etc. It can remove wrinkles and finalizethe design of various fabrics, achieve ideal ironing effect, and meet the steam supply of other equipment.

· Technical Parameters

Name	YUNBA H99X1 Smart ironing steam generator
Product Model	H99X1
Heater Rated Power	12kW
Rated Voltage	AC380V(Details pls. review the nameplate)
Working Pressure	1.5~4.2Kg/cm² （Adjustable）
Rated evaporation	13.5L/H
water source pressure	1～3Kg/cm²
Size of Host	547*257*770mm

· Product External Structure

· Host--TOP

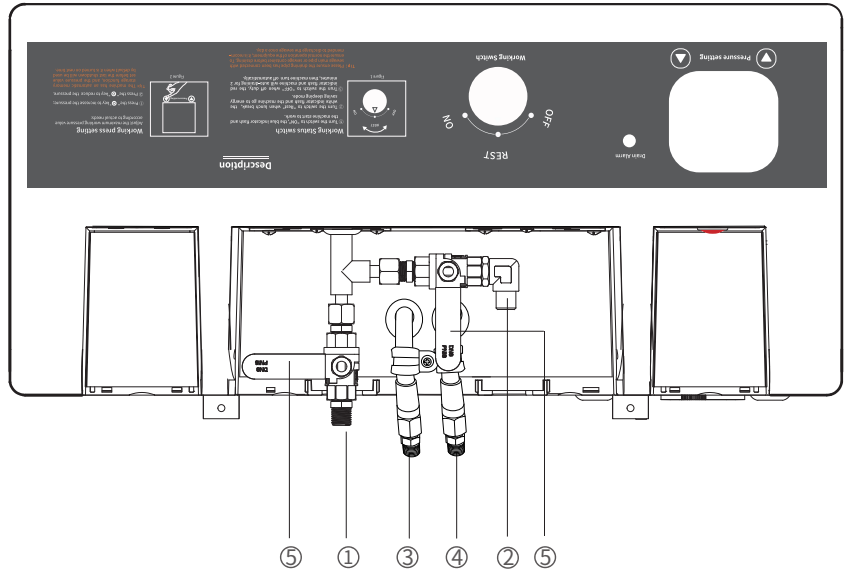

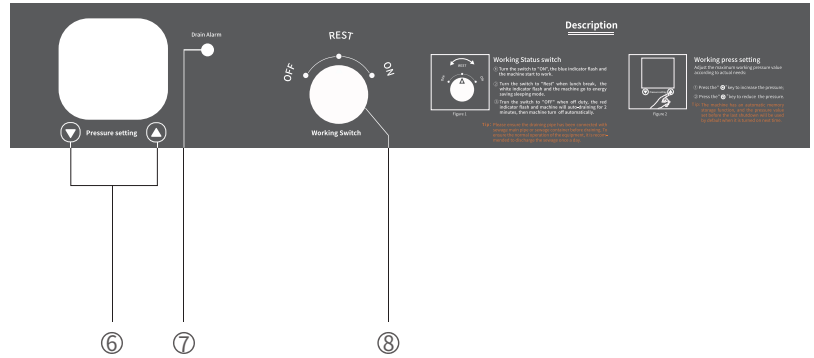

1、Steam pipe interface Ⅰ
2、Steam pipe interface Ⅱ
3、Water return pipe interface Ⅰ
4、Water return pipe interface Ⅱ
5、Steam control switch
6、 Pressure setting button
7、Drainage warning indicator
8、Working Status Switch

• Host--FRONT

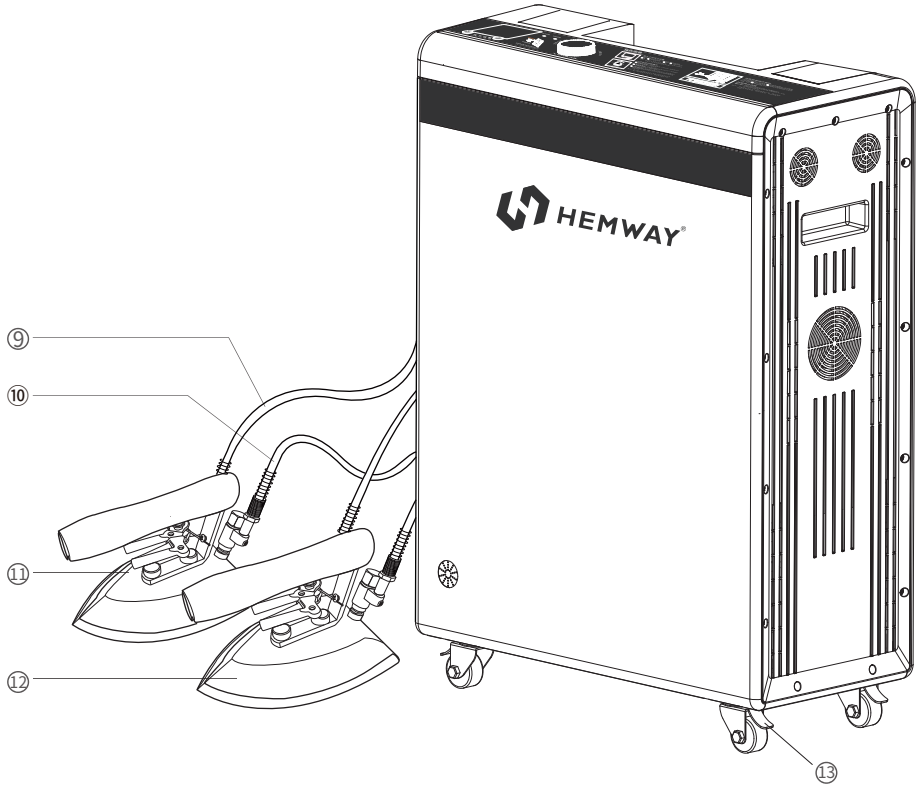

9、Steam pipe　10、Water return pipe　11、Iron I　12、Iron II　13、Wheel brake

• Host--BACK

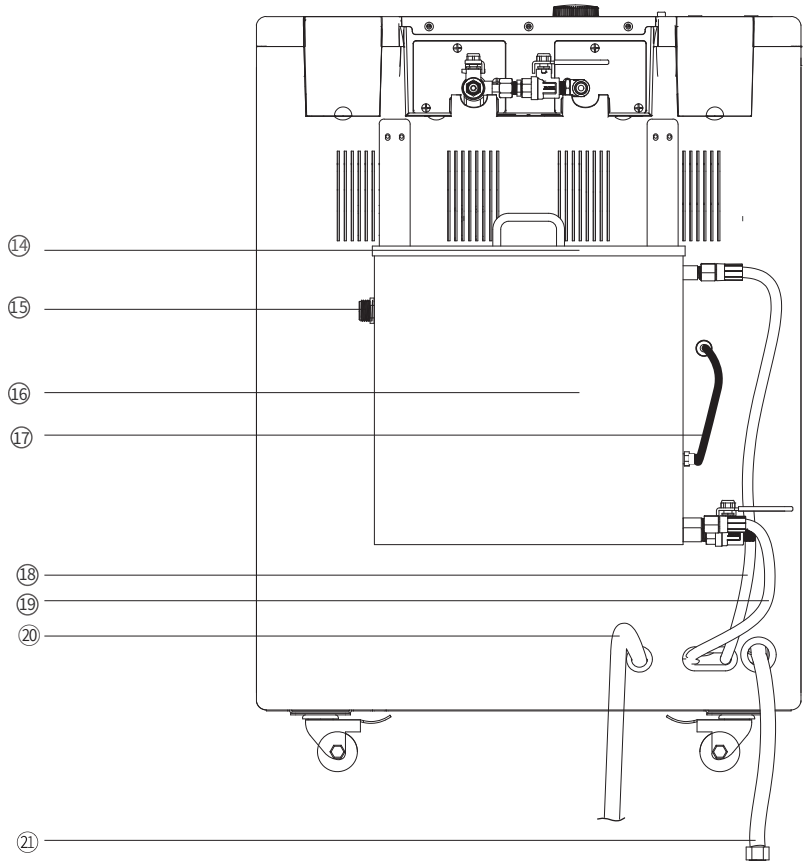

14、Water tank top cover　15、Water source inlet　16、Water tank
17、Water level detector signal line　18、Condensate pipe　19、pump inlet pipe
20、power cable　21、drainage pipe

· Packing List

NOTE when opening the outer packing, please read the instructions carefully and keep the relevant certificates properly.

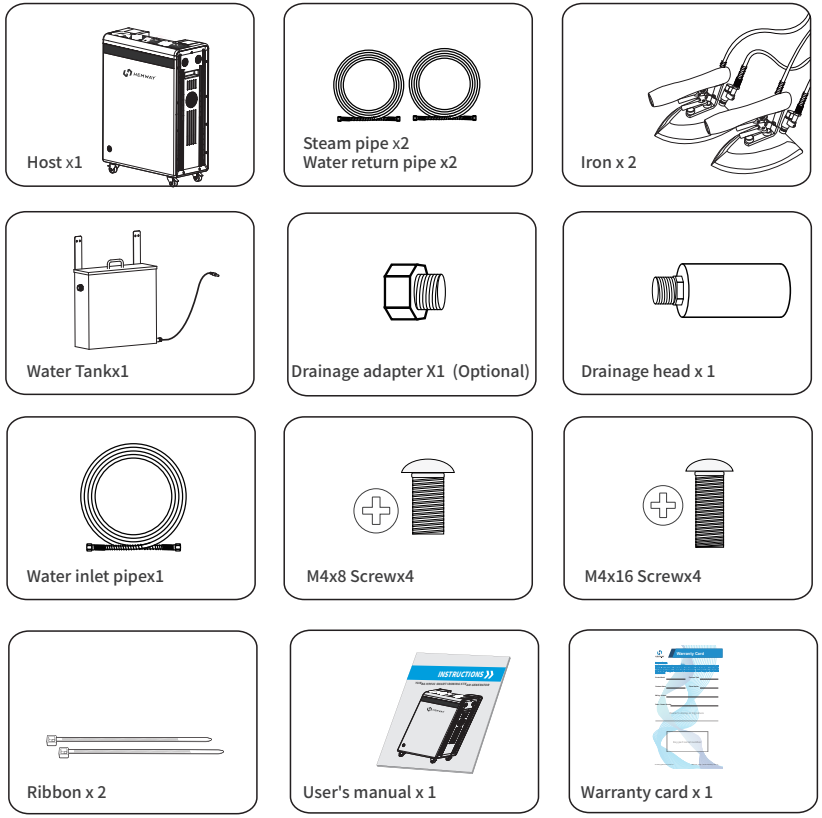

NOTE if there is a shortage or damage of parts, please contact the local distributor .

二、INSTALLATION GUIDANCE

Tip: Disconnect the power supply and turn off the steam control switch before installation

· Product Installation Standards

· Circuit Installation

Power short-Circuit Protection Installation Instructions .

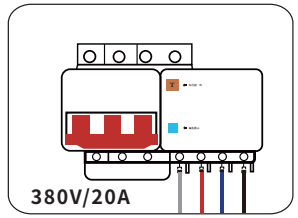

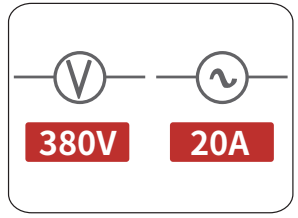

· Connect 380V Power short-Circuit Protection

Note: Disconnect the power supply before connect the Power short-Circuit Protection switch

When the rated voltage on rating label is 380V,the current of the supply line must no less than 20A ,connect 380V Power short-Circuit Protection and GROUND; use the corresponding power supply line to avoid overload of the circuit caused by the equipment being energized.

· Power cable Load Standard

AC380V three-phase electric power supply line reference		
The Distance between Power switch and devices	Device quantity	power cable Specification
within 10 meters	one set	RVV5*2.5mm²
	two sets	RVV5*6.0mm²
	three sets	RVV5*10.0mm²
	four sets	RVV5*10.0mm²
	five sets	RVV5*16.0mm²
more then 10 meters	one set	RVV5*4.0mm²
	two sets	RVV5*6.0mm²
	three sets	RVV5*10.0mm²
	four sets	RVV5*16.0mm²
	five sets	RVV5*16.0mm²

• Equipment Installation

(Disclaimer: Hemway will not be responsible for any consequences arising from the failure to operate as required.)

• Iron Installation

- Refers to figure 1, install the steam pipe and water return pipe of the iron on the corresponding wiring port (Steam pipe joint and Water return pipe joint) and lock them tightly.

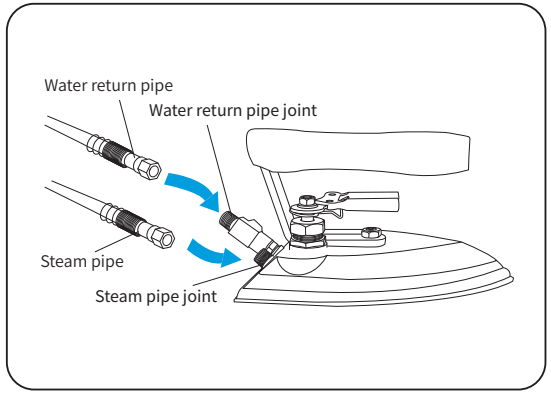

Figure 1

- Refers to figure 2, install the steam pipe and water return pipe of the iron on the corresponding wiring port (Steam pipe joint and Water return pipe joint) and lock them tightly.

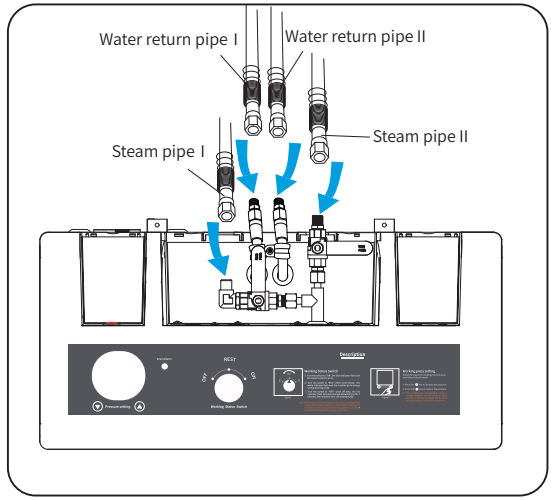

Figure 2

• Water tank installation

- As shown in Figure 3, use 4 M 4 x 8 screws to fix the fixing bar on the upper back of the water tank, paying attention to the installation direction of the fixing bar.

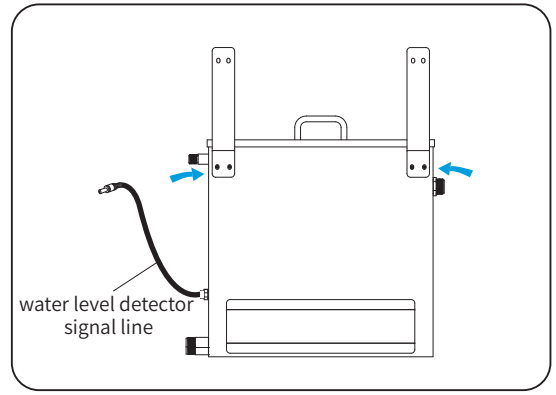

Figure 3

- As shown in Figure 4, use 4 M 4 x 16 screws to fix the water tank on the equipment, and tighten the screws to prevent loosening.

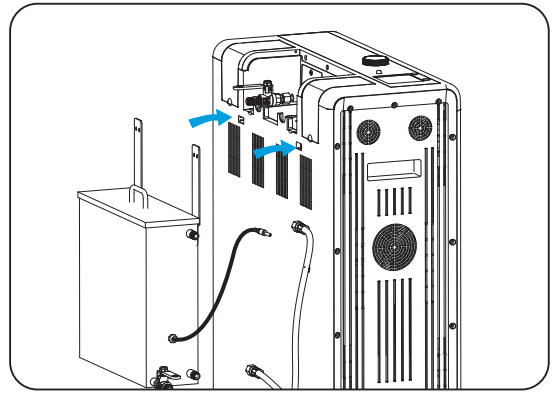

Figure 4

- As shown in Figure 5, install the floating ball on the float switch and tighten it, and keep the floating ball facing down vertically.

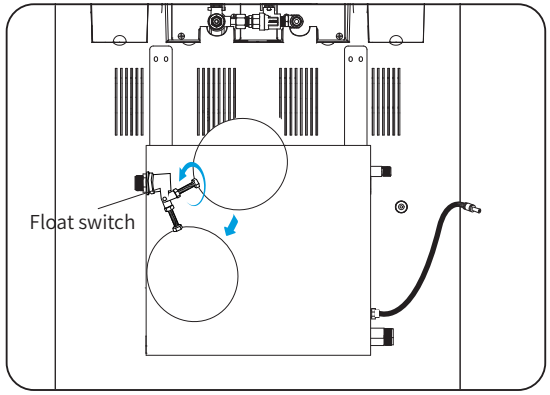

Figure 5

- As shown in Figure 6, after fixing the water tank, install the water pipes as shown in the figure, paying attention to the exhaust gas return pipe, the water pump inlet pipe, and the water tank water level detector signal line.

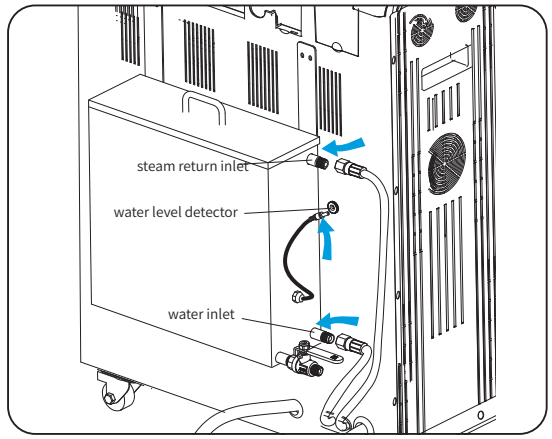

Figure 6

• Device pipeline installation

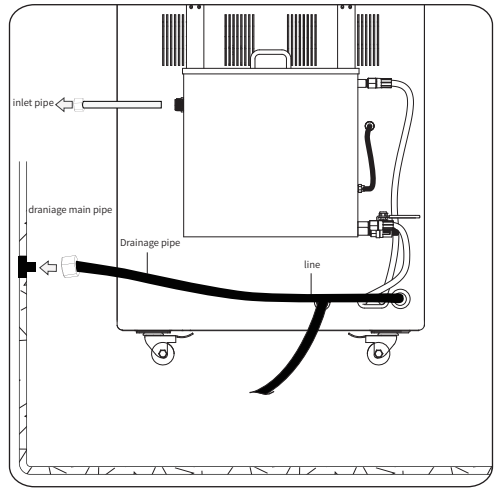

Recommend Installation Method

- Connect the water inlet connector to the water inlet main pipe.
- Connect the drainage pipe to the drainage main pipe.

Tip: Always use soft water and water pressure limition: 1～3Kg/cm2

Drainage Pipeline Standard

Device Quantity	Pipe
three sets	3/4”
five sets	1”
ten sets	1.5”

Recommend Material: 304 stainless steel pipe,Optional Material: galvanized pipe, PPR pipe

After the initial installation or disassembly for maintenance, you must keep the water! in the state for 10 minutes before turning on the machine to prevent the pump from being damaged by dry pumping!

Optional Installation Methods (Not Recommend)

When the workshop does not install the water pipe

- Put the water inlet tube into the inlet bucket.
- Tighten the connection between the drainage pipe and drainage head of the equipment and put it into the drainage container.

(Disclaimer: Hemway will not be responsible for any consequences arising from the failure to operate as required.)

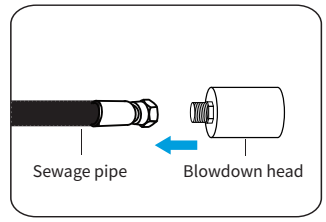

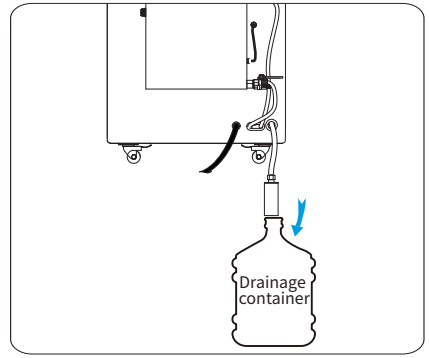

三、OPERATATION GUIDE

NOTE please carefully check whether all parts had been installed in place,make sure every joint is tightly locked .

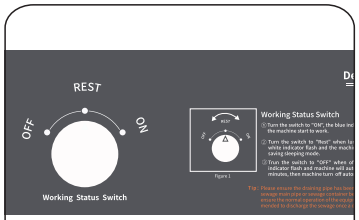

Control Pane

To Start Working

- Turn the status switch to the ON position, the corresponding indicator on the control panel light up,and the system enter the working state.
- To adjust the steam pressure, please press " ▲ " or " ▼ "in the pressure setting area of the control panel.

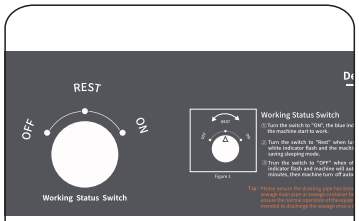

Control Pane

To Take A Rest

- During the lunch break, turn the status switch to the REST position, the corresponding indicator on the control panel light up,and the system enter the standby state.

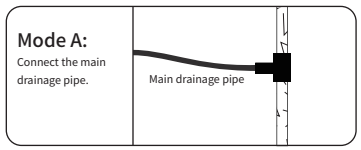

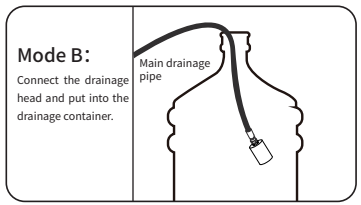

When Off Work

- Switch to the OFF position two minutes in advance to off work, and thesystem enters the drainage status. Please ensure that the drainage pipe is connected in the following way before draining:
- Mode A: please ensure that the drainage pipe is firmly connected to the main drainage pipe;
  Mode B: please ensure that the drainage pipe is firmly connected to the drainage head and put the drainage pipe with drainage head into the drainage container.

NOTE

the drainage process takes about two minutes,during which time do not switch off the power.

(When draining, will cause heavy airflow roar voice, it is normal phenomenon)

四、MAINTENANCE

ITEM	CONTENT	FREQUENCY
Drainage	draining after off work	Daily
Drainage pipe	check the drainage pipe joints, and tighten it with wrench if there is any loose;check the drainage pipe for blocking, clean the pipe in time to avoid affecting the drainage.	Monthly
Deeply Descaling	Clean the residual scale in the boiler innerface, and remove the water level detector and use sandpaper to clean the scale on the surface;Clean the heater and boiler innerface regularly (many scale accumulates on the innerface of the heater used for a long time, which will reduce energy efficiency and increase power consumption. It is recommended to replace it)	Every Six month
Heat emission Holes	① Check the air outlet of the cooling fan regularly for foreign matter and shielding (timely cleaning). ② Check regularly whether the cooling fan is rotating normally (with or without wind power), and maintain in time if any abnormality is found. ③ Clean the cooling fan filter regularly	Monthly
Circuit	Check whether the short-cut protection circuit function is normal, whether the short-cut protection circuit switch is loose, fire traces, use screwdriver to tighten or replace it.	Monthly
Water tank clean	① Open the water tank cover to clean the water tank. ② Please use soft water to reduce scale formation.	Weekly

五、FAULT ANALYSIS AND TROUBLESHOOTING

1.Fault Code Analyses:

Fault code	F02			
Fault phenomenon	Abnormal time for adding water and replenishing water (when the water is added for more than 6 minutes and none stop, or when the water is replenished for more than 4 minutes and is not replenished)			
Fault character	water adding system error			
Fault point	Water source	Water pump	Two position three way solenoid valve	Water tank (equipment with water tank)
Check and confirm methods	Check if water is blocked	①Check if the pump is working normally (there is slight vibration and sound when working normally)Water will come out of the drainage pipe within 5 seconds after starting the machine. ②When there is no vibration, check whether the pump power supply end voltage is normal (DC24V), normal means the water pump is broken. ③No drain when vibration, check whether the voltage at the power supply end of the pump is normal (DC24V), otherwise the pump is broken.	①Check if the voltage at the power supply end of two position three-way solenoid valves is normal (DC24V), which is combined with crisp sound under normal circumstances.No sound absorption means that the water return valve is broken. ②Under normal circumstances, suction but no water, it means that the pipeline or one-way valve blocked.	Check if there is water in the water inlet tank
Handling method	Clean the blockage	Replace water pump	Replace water retrun valve or clean the	check water source

2.Other Fault Analysis:

Fault Phenomenon	Fault Character	Fault Point	Check And Confirm Methods	Handling Method
Iron serious spraying water	Abnormal water level control	Water level sensor scale	After drain, disassemble the equipment to check if the water level probe is scaling	Clean water level probe
		Main control board damaged	After drain, check if the voltage between the water level probe and the hardware plate where the probe is located is AC12±1v;After the equipment is filled with water, check if the voltage between the water level probe and the hardware plate where the probe is located is AC0±1V.	① Replace main control board ② Check the water level line and water level grounding port
The screen does not display and the power indicator does not light	Abnormal power supply	Electric leakage protection switch	Check whether the electric leakage protection input voltage is normal; if the voltage is normal, check the output voltage; if there is no voltage at the output end, then the electric leakage protection switch is damaged.	Replace electric leakage switch
	failed to connect control board or display board failure	LED Display obnormal	Firstly check the power LED indicator on the back of LED display, if it is on, If it is on, use a multimeter to observe the voltage between the second and third pins of the main control board and the ground wire. Normally, the DC voltage should be about 2V, and the AC voltage It should also be around 2V.	If the power LED indicator is off or the voltage is abnormal, replace the display board
		connection wire	Inspection method: Use a multimeter to measure the voltage between the two ends of the wiring to the ground. If the voltage at both ends is not the same to the ground, it should be problem.	replace connection wire
Pressure setting failure	Pressure setting system abnormal	Pressure setting key	Disconnect the power supply, open the side cover of the device, press the pressure setting key, and test the two ends of the key with the multimeter. Failure to connect means the key is broken.	Replace the keys
		Main control board	Disconnect the power supply, open the side cover of the equipment, press the pressure setting key, and test with multimeter. If it is connected, the main control board is broken.	Replace main control board
The equipment cannot enter the descaling state	Descaling abnorma	Abnormal power supply plug of the cleaner	Check if the power supply plug of the cleaner is loose or not.	Tighten the plug

六、AFTER SERVICE

If you have any quality problems or other problems after purchase Hemway products, please contact the local distribut or **hemway@hemway.com.cn** for consultation.

To apply for a warranty must be in accordance with the below conditions:

1. Please operate the machine strictly according to the manual when it is first started up and used.
2. Please use parts only from HEMWAY original.
3. Please refer to the warranty card for other terms.